Overview of IEA GHG Activities on Bio-CCS

Ameena Camps, Tim Dixon,
Steve Goldthorpe, Stanley Santos

IEA Greenhouse Gas R&D Programme

Cheltenham, UK

Bio-CCS Workshop

Holland House Hotel, Cardiff

25th October 2011

Presentation Overview

- ***IEA Greenhouse Gas R&D Programme***
- ***Overview of IEAGHG's Activities on Bio-CCS***
  - Completed Studies
  - On-Going Studies
- ***Techno-Economic Evaluation – Biomass Fired and Co-Fired Power Plant with CO2 Capture (IEAGHG Report No.:***

IEA Greenhouse Gas R&D Programme

- ***A collaborative research programme founded in 1991***
- ***Aim: Provide members with definitive information on the role that technology can play in reducing greenhouse gas emissions.***
- ***Producing information that is:***
  - ✓ Objective, trustworthy, independent
  - ✓ Policy relevant but NOT policy prescriptive
  - ✓ Reviewed by external Expert Reviewers
  - ✓ Subject to review of policy implications by Members
- ***IEA GHG is an IEA Implementing Agreement in which the Participants contribute to a common fund to finance the activities.***
- ***Activities: Studies and Reports (>120); International Research Networks : Wells, Risk, Monitoring, Modelling, Oxyfuel, Capture, Social Research, Solid Looping; Communications (GHGT conferences, IJGGC, etc); facilitating and focusing R&D and demonstration activities e.g. Weyburn***

What IEAGHG does

- ***Technical evaluations of mitigation options***
  - Comparative analyses with standardised baseline
- ***Assist international co-operation***
  - International research networks
- ***Assist technology implementation***
  - Near market research
  - GCCSI
- ***Disseminate information***

Members and Sponsors

Global Policy Context

iea

carbon sequestration leadership forum

CIAB

IEA CLEAN COAL CENTRE

International Policy Setting

GLOBAL CCS INSTITUTE

Implementation actions

ieaghg

- National/Corporate policy setting
- National/Corporate research programmes

Industry CCS Workshop

"Challenges and Opportunities of CO_2 Capture & Storage in the Iron and Steel Industry"

Steel Institute VDEh Auditorium
Dusseldorf, Germany
8th - 9th November 2011

Completed Studies

- ***Techno-Economics of Biomass Fired or Co-Fired Power Plant with Post Combustion Capture***
  (IEAGHG Report No.: 2009/09)
- ***Global Potential of Biomass and CO2 Capture Storage***
  (IEAGHG Report No.: 2011/06)
- ***Contribution to the UNIDO Industry CCS Roadmap***
  http://www.iea.org/Papers/roadmaps/ccs_industry.pdf

Potential for Biomass and Carbon Dioxide Capture and Storage (IEAGHG 2011/06)

- Global & regional first order assessment of potential for BE-CCS
- Technical, Realisable & Economic Potential

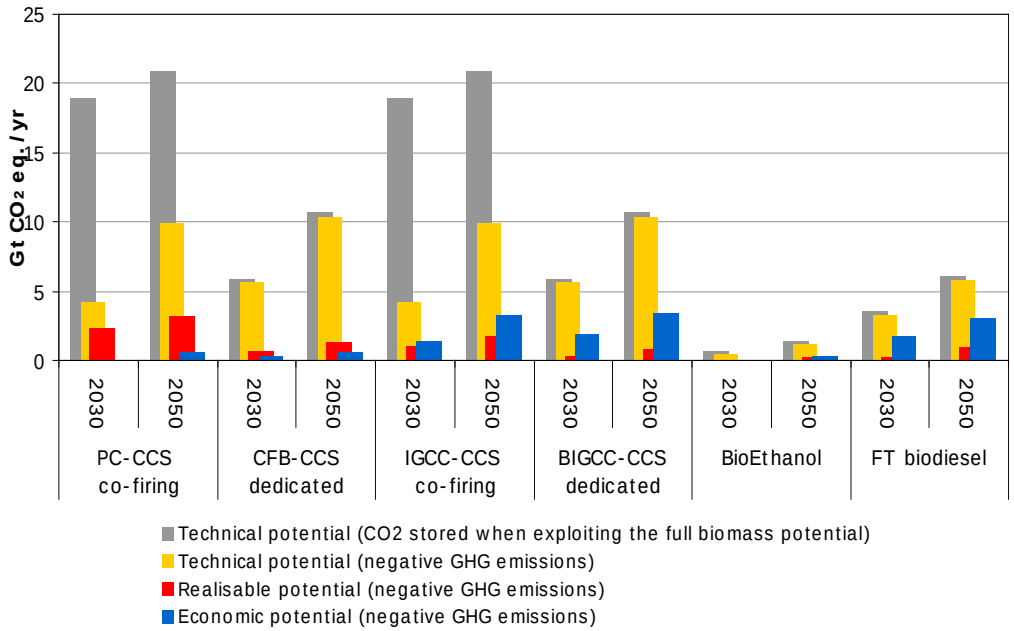

- Global technical potential: up to c. 10 Gt CO_2 eq/yr , greatest potential for negative emissions for BIGCC-CCS and CFB-CCS.
- Significant compared to IEA ETP (2010) estimate of 43 Gt of global CO_2 emissions reductions required from the energy sector by 2050

- As presented by Pieter van Breevoort of Ecofys earlier today

IEAGHG On-Going Activities on Bio-CCS

- ***Follow up on IEAGHG 2011/06 study***
  - Biomass CCS Website
  - Global Potential of Biogas with CCS
- ***Biomass XtL with CCS***
  - Focus on addressing the needs for the Aviation Industry
  - Touch on the transport sector (Bio-diesel and Bio-ethanol)
- ***Bio-CCS Application – Pulp and Paper Industry (Techno-Economics)***
- ***Biomass CCS – Guidance for the Accounting of Negative Emissions***

Addressing the Needs of Biofuel for the Aviation Industry

- ***EU ETS – the inclusion of Aviation Industry***
- ***Industry assessing options to produce their own fuel***
  - Biomass XtL
    - MSW feedstock
  - Waste Oil Reprocessing
  - etc… etc…

Follow on Study: Biogas & Website

- Two biofuels routes assessed in Potential for Biomass and Carbon Capture and Storage – FT diesel & bioethanol
- Review proposed benefit of considering production of biogas with CCS.
- The follow on study considers most applicable routes identified through experts and a literature review, with additional assessment in terms of growth of demand for natural gas & to what extent biogas can replace other energy fuels.
- Similar approach determining potential net GHG emissions
- Model used in assessment will be made available on IEAGHG website as an interactive tool.

Techno-Economic Evaluation of Biomass Fired or Co-Fired Power Plant with Post Combustion Capture

Bio-CCS Workshop

Holland House Hotel, Cardiff

25th October 2011

Acknowledgement

- ***This presentation is the results of the work done by Foster Wheeler Italiana for IEA Greenhouse Gas R&D Programme***

- ***We would like to thank…***
  - Paolo Cotone
  - Franco Gasparini
  - Rosa Maria Domenichini

Outline

- ***Motivation of this Study (Discussion Points)***
- ***Study Cases***
- ***Design Basis***
- ***Summary of Performance Results***
- ***Economic Analysis***
- ***Concluding Remarks***

Discussion Points

- *How to consider the "Accounting" of CO_2 Captured from Biomass Fired Power Plant*
  - The discussion is now centred on how to consider the CO_2 emitted from biomass-fired power plants, if it is counted as "CO_2 neutral" and if stored, whether how this could be considered or accounted as a "negative" CO_2 emission.
  - Validation / Accounting methodology when CO_2 captured from Co-Fired Power Plant.

- *One of the questions/Issues addressed in this study:*
  - **"What should be the cost of CO_2 emissions avoided that would make CCS an attractive option to be incorporated into a biomass fired power plant assuming that the stored CO_2 from a biomass fired power plant could generate an additional revenue as CO_2 credit"**

Study Cases

- ***Case 1: Nominal 500 MWe (net) Coal co-fired with Biomass Supercritical PC Power Plant.***
- ***Case 2: : Nominal 500 MWe (net) Coal co-fired with Biomass Supercritical CFB Power Plant.***
- ***Case 3: : Nominal 250 MWe (net) Biomass (standalone) CFB Power Plant.***
- ***Case 4: : Nominal 75 MWe (net) Biomass (standalone) BFB Power Plant.***

- ***For all the four cases, power plants without and with CO_2 capture are evaluated***

Design Basis (Summary)

- ***Feedstocks:***
  - Eastern Australian Bituminous (LHV = 25.87 MJ/kg; Coal S = 1.1% wt, dry ash free basis)
  - Biomass is a clean, virgin wood chips (LHV = 7.3 MJ/kg)
- ***Location of the Power Plant***
  - NE Coast of The Netherlands
- ***Reference Ambient Temperature: 9°C***
- ***Cooling Water Type:***
  - Once through sea water cooling
  - Cooling temperature: 12°C → 19°C

Design Basis (Summary)

- ***Emissions Limit;***
  - Based on the requirement of the EC Large Combustion Directives.
    - NOx (as NO_2): ≤ 200 mg/Nm^3(@ 6%$_v$ O_2 – dry)
    - SOx (as SO_2): ≤ 200 mg/Nm^3(@ 6%$_v$ O_2 – dry)
    - Particulates: ≤ 30 mg/Nm^3(@ 6%$_v$ O_2 – dry)

- ***CO_2 Characteristics at Battery Limits***
  - Delivered Pressure: 110 Bar
  - CO_2 Purity: ≥ 99% (≤ 10 ppm H_2O)

Summary – Cases

Case No.	Boiler Technology	Fuel Feedstock	Nominal Rating	CO_2 Capture
1a	PC (supercritical)	Coal (90%) + Biomass (10%)*	500MWe (net)	No
1b	PC (supercritical)	Coal (90%) + Biomass (10%)*	500MWe (net)	Yes
2a	CFB (supercritical)	Coal (90%) + Biomass (10%)*	500MWe (net)	No
2b	CFB (supercritical)	Coal (90%) + Biomass (10%)*	500MWe (net)	Yes
3a	CFB (subcritical)	Biomass	250MWe (net)	No
3b	CFB (subcritical)	Biomass	250MWe (net)	Yes
4a	BFB (subcritical)	Biomass	75MWe (net)	No
4b	BFB (subcritical)	Biomass	75MWe (net)	Yes

* Based on thermal input (LHV value)

Case 1a - Biomass Co-Fired SC PC Boiler Power Plant w/o CO_2 capture

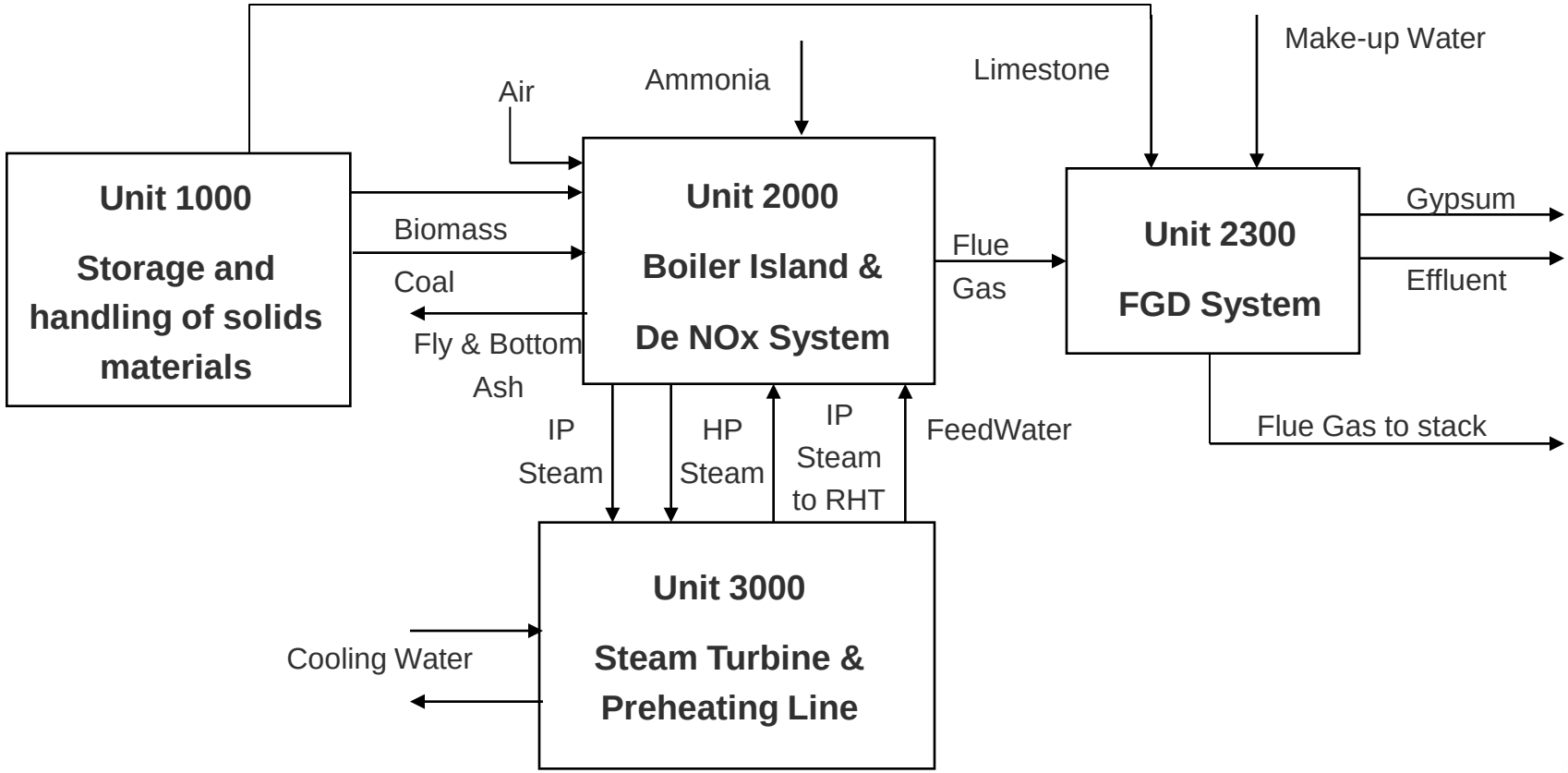

Case 1a (Power Plant Features)

- ***Power Plant Capacity***
  - Actual Net Power Output: 518.9 MWe
- ***Boiler is commercially available / proven***
- ***Boiler is co-fired with 10% Biomass (LHV basis); No pre-drying of biomass***
- ***Steam Conditions:***
  - 580°C HP (275 Bar) / 600°C RH (55 Bar)
  - Boiler Efficiency: ~93%
- ***SCR and FGD are installed to meet the emissions required.***

Case 1b - Biomass Co-Fired SC PC Boiler Power Plant with CO_2 capture

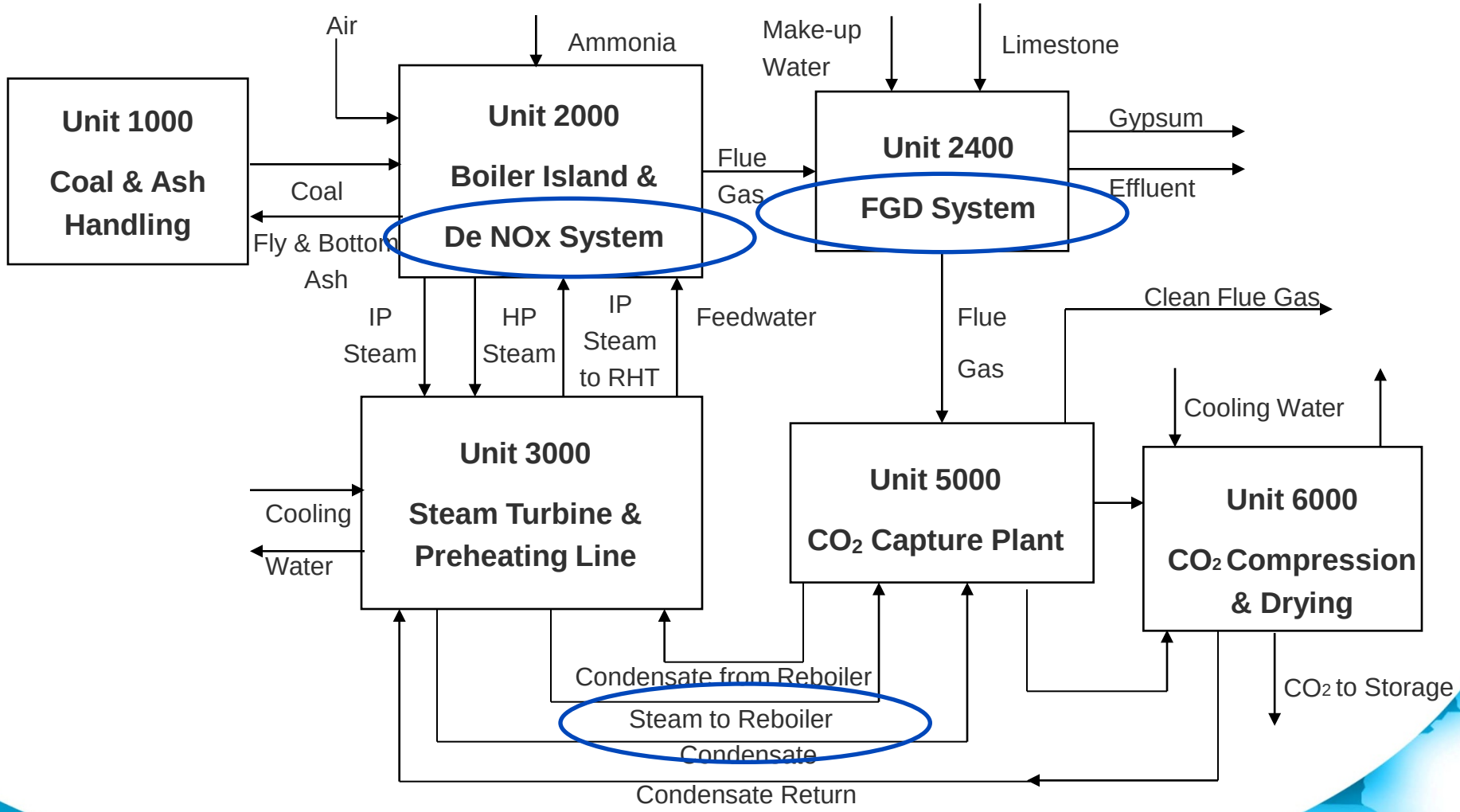

Case 1b (Power Plant Features)

- ***Boiler is the same size with Case 1a. Due to extraction of low pressure steam from the steam turbine for the reboiler of the CO_2 capture plant – actual output is reduced.***
- ***Actual Net Power Output: 399 MWe***
- ***SCR and FGD are installed to meet the 10 ppm and 20 ppm level for SO_2 and NO_2 respectively to reduce the MEA degradation.***
  - Deep removal of SOx by the Limestone FGD should be demonstrated.
- ***Due to removal of CO_2 from the flue gas – NOx level (mg/Nm^3) should be expected higher (as compared to Case 1a)***
  - NOx removal level at SCR outlet should be 15% lower.

Case 2a - Biomass Co-Fired SC CFB Boiler Power Plant w/o CO_2 capture

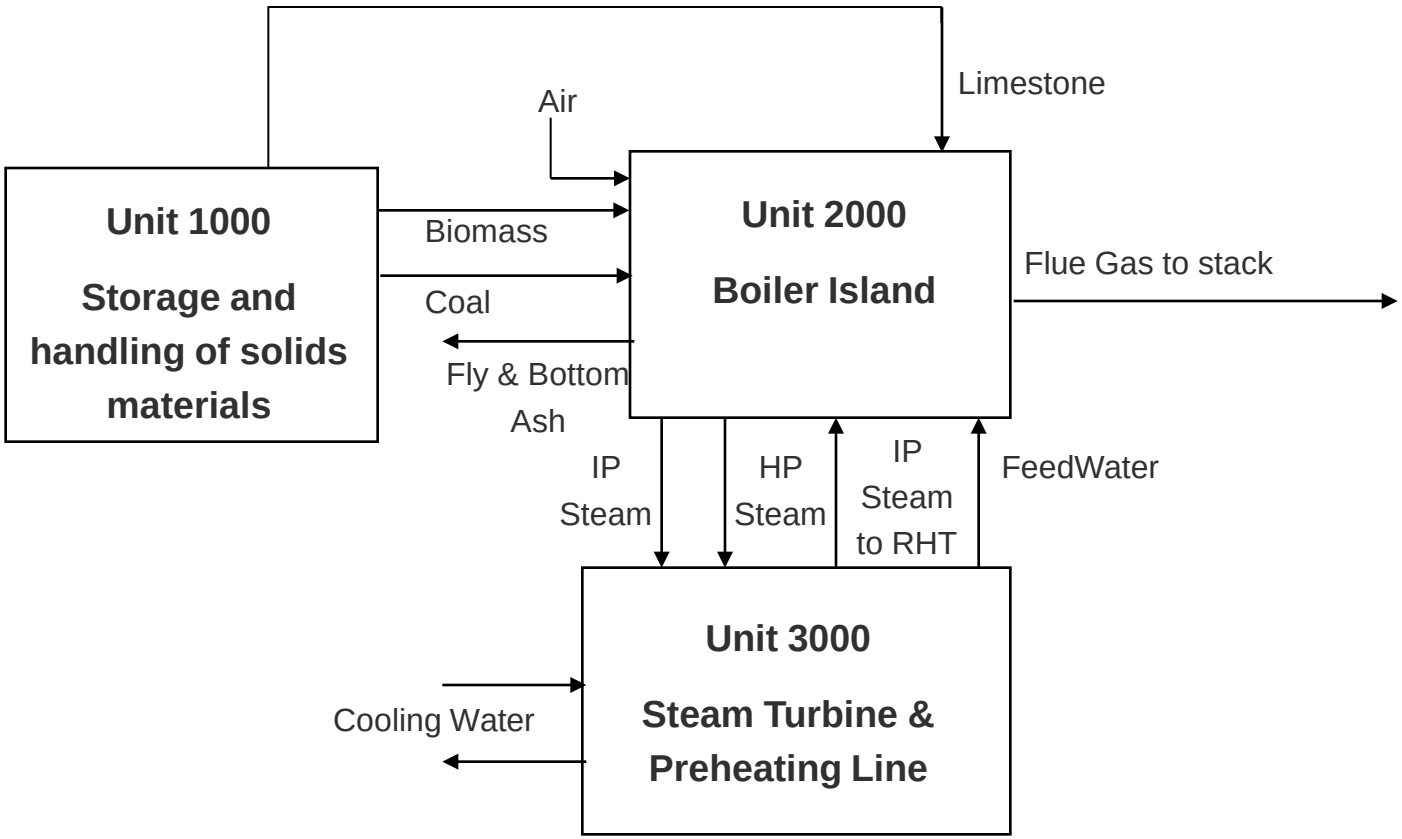

Case 2a (Power Plant Features)

- ***Power Plant Capacity***
  - Actual Net Power Output: ~521 MWe
- ***Boiler is based on supercritical boiler technology which is commercially available / proven***
- ***Boiler is co-fired with 10% Biomass (LHV basis); No pre-drying of biomass***
- ***Steam Conditions:***
  - 580°C HP (275 Bar) / 600°C RH (60 Bar)
- ***Only limestone injection into the boiler is included. Ca/S ratio of 2.84 is used to achieve the minimum emissions required.***

Case 2a (Power Plant Features)

- ***No SCR is installed. Required NOx emission is achieved by the CFB itself. Lower NOx emission is expected due to lower combustion temperature in the CFB boiler.***
- ***Special Feature of the Power Plant:***
  - **A plastic heat exchanger is installed downstream of the ID fan to maximise the heat recovery thus achieving some efficiency gain.** (Expected flue gas temperature at stack ~90°C)

Case 2b - Biomass Co-Fired SC CFB Boiler Power Plant with CO_2 capture

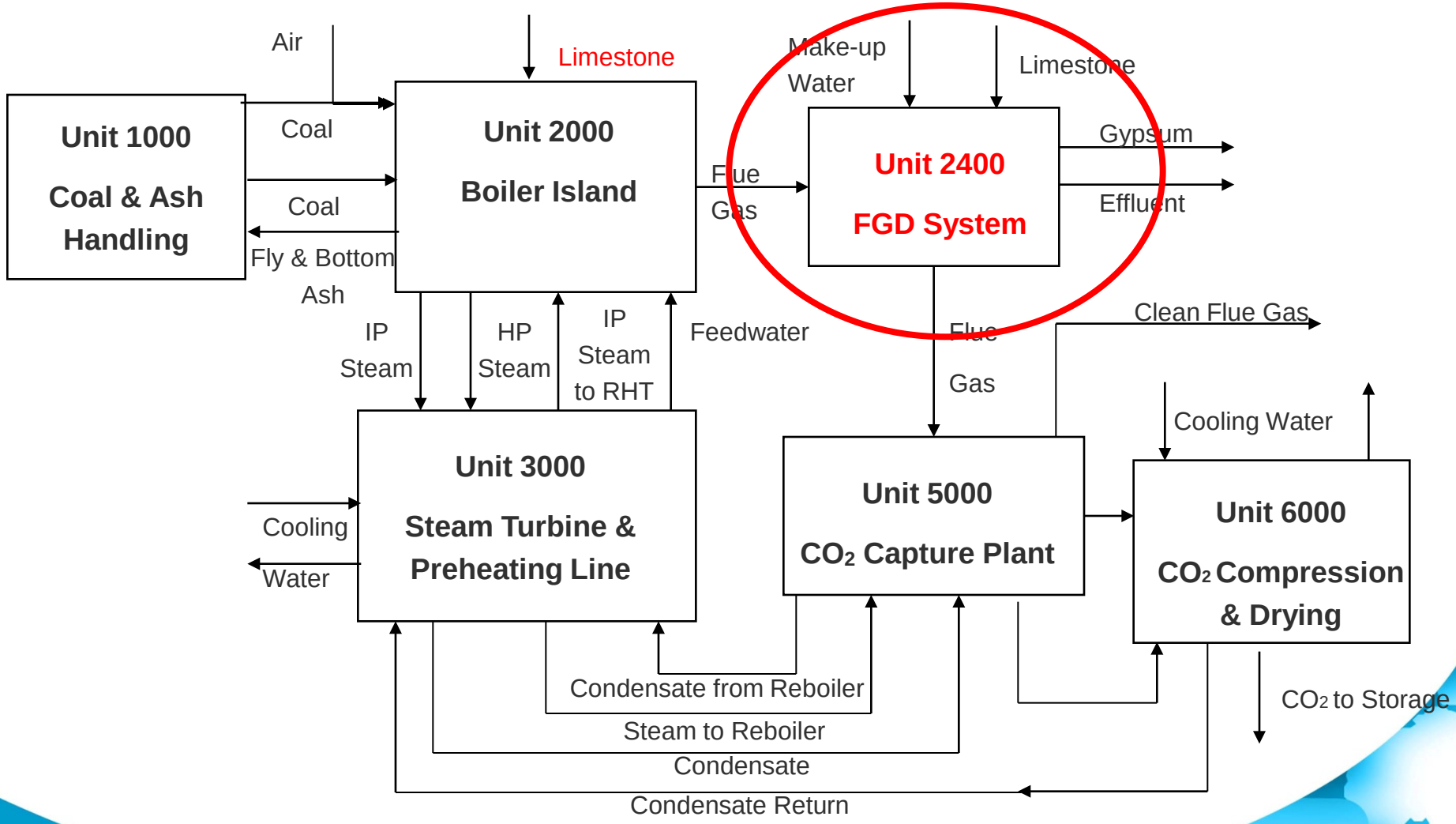

Case 2b (Power Plant Features)

- ***Boiler is the same size with Case 2a. Due to extraction of low pressure steam from the steam turbine for the reboiler of the CO_2 capture plant – actual output is reduced.***
- ***Actual Net Power Output: ~390 MWe***
- ***To achieve the 10 ppm SOx level, in addition to the limestone that is injected into the boiler with a Ca/S ratio of 1, an external FGD has been installed.***
- ***Unlike Case 2a, there will be no plastic heat exchanger installed downstream of the ID fan due to the installed FGD.***

Case 2b – Power Plant Features

- ***No SCR is installed. It is expected that NOx level required will be met by the CFB Boiler itself.***
  - NO_2 in flue gas (15-20% of NOx) is considered tolerable by the MEA without further abatement in the SCR system.
- ***N_2O at boiler outlet is expected to be low (~14 mg/Nm3) due to the operating temperature in the bed considered.***
  - N_2O is not expected to be removed by the MEA.
  - The possible formation of stable salts from N_2O should be investigated with the solvent suppliers.

Performance of the Power Plants - Summary

Case	Plant Type	Nominal Size	SCR	FGD	CO_2 Capture	Net Efficiency	Net output
1a	SC PF boiler	500 MWe	Yes	Yes	0	44.8%	518.9 MWe
1b	SC PF boiler	500 MWe	Yes	Yes	90%	34.5%	398.9 MWe
2a	SC CFB boiler	500 MWe	No	No	0	45.1%	521.4 MWe
2b	SC CFB boiler	500 MWe	No	Yes	90%	33.8%	390.5 MWe

Economic Assessment

- ***Basic Assumptions & Assessment Criteria***

✓ ***Availability:*** *90% (w/o capture) 88% (w/ capture)*

✓ ***Cost of coal:*** *2.90 €/GJ*

✓ ***Cost of biomass:*** *8.39 €/GJ*

✓ ***Plant cost:*** *in Euro (May 2009)(1 € = 1.35 US $)*

✓ ***Discount Rate:*** *10% (Annual Basis)*

✓ ***Plant life:*** *25 years*

✓ ***CO_2 transport cost:*** *Not considered*

Economic Analysis (cont'd)

Estimated CAPEX

	Total Investment cost Million of Euro	Specific Cost Euro/kW
Case # 1a	657.21	1267
Case # 1b	824.32	2066
Case # 2a	707.28	1357
Case # 2b	918.37	2352

Accounting of CO_2 Avoided Cost

- ***Questions to be resolved (ie. tasks of policy development)***
  - Choice of Reference Power Plant to account for the overall negative emissions when CO2 from biomass fired power plant?
  - If 90% of the CO2 captured... How would you be able to account for the negative emissions?

Manner to Calculate CO2 Avoided by this Study

Table A.6.1: Summary of CO_2 Emissions of the Biomass Fired or Co-Fired Power Plant

	Actual CO_2 Emissions	CO_2 from Coal	CO_2 from Biomass	Total CO_2 Captured	Equivalent CO_2 Emissions	CO_2 avoided with resp to conventional coal	CO_2 avoided with resp. to NGCC
	g/kWh	g/kWh	g/kWh	g/kWh	g/kWh	g/kWh	g/kWh
SC PC Boiler with coal (without CO2 capture)	722.8	722.8	-	-	722.8	-	-
NGCC (without CO2 capture)	359.0	359.0	-	-	359.0	-	-
SC PC boiler co-fired with biomass							
Case 1A (without CO_2 capture)	748.5	649.7	98.8	0.0	649.7	73.1	-290.7
Case 1B (with CO_2 capture)	973.7	845.2	128.5	876.4	-31.3	754.1	390.3
SC CFB boiler co-fired with biomass							
Case 2A (without CO_2 capture)	748.2	649.4	98.8	0.0	649.4	73.4	-290.4
Case 2B (with CO_2 capture)	999.0	867.1	131.9	899.1	-32.0	754.8	391.0

Scenarios Considered

4 scenarios considered for the economical analysis:

- ***Scenario 1: the calculation of the cost of electricity does not include the revenues from the green certificates nor from the ETS mechanism.***
- ***Scenario 2: the calculation of the cost of electricity only includes the revenues from the green certificates (50 €/MW).***
- ***Scenario 3: the calculation of the cost of electricity only includes the revenues from the ETS mechanism (14€/t CO_2).***
- ***Scenario 4: the calculation of the cost of electricity includes both the revenues from the green certificates and from the ETS mechanism.***

For Scenario 01 – No Consideration of ETS or Green Certificate Incentives (Case 1 and 2)

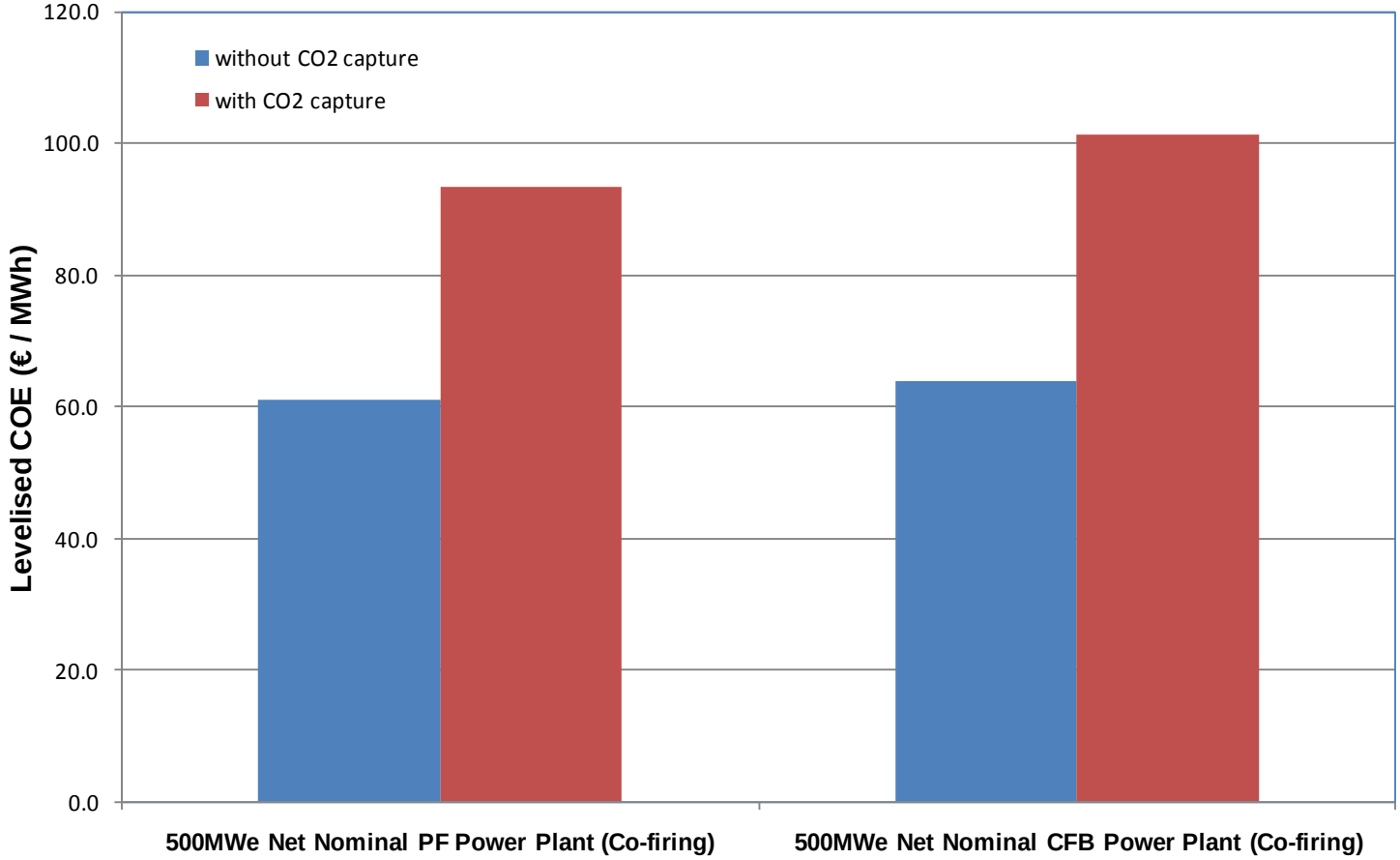

Economic summary

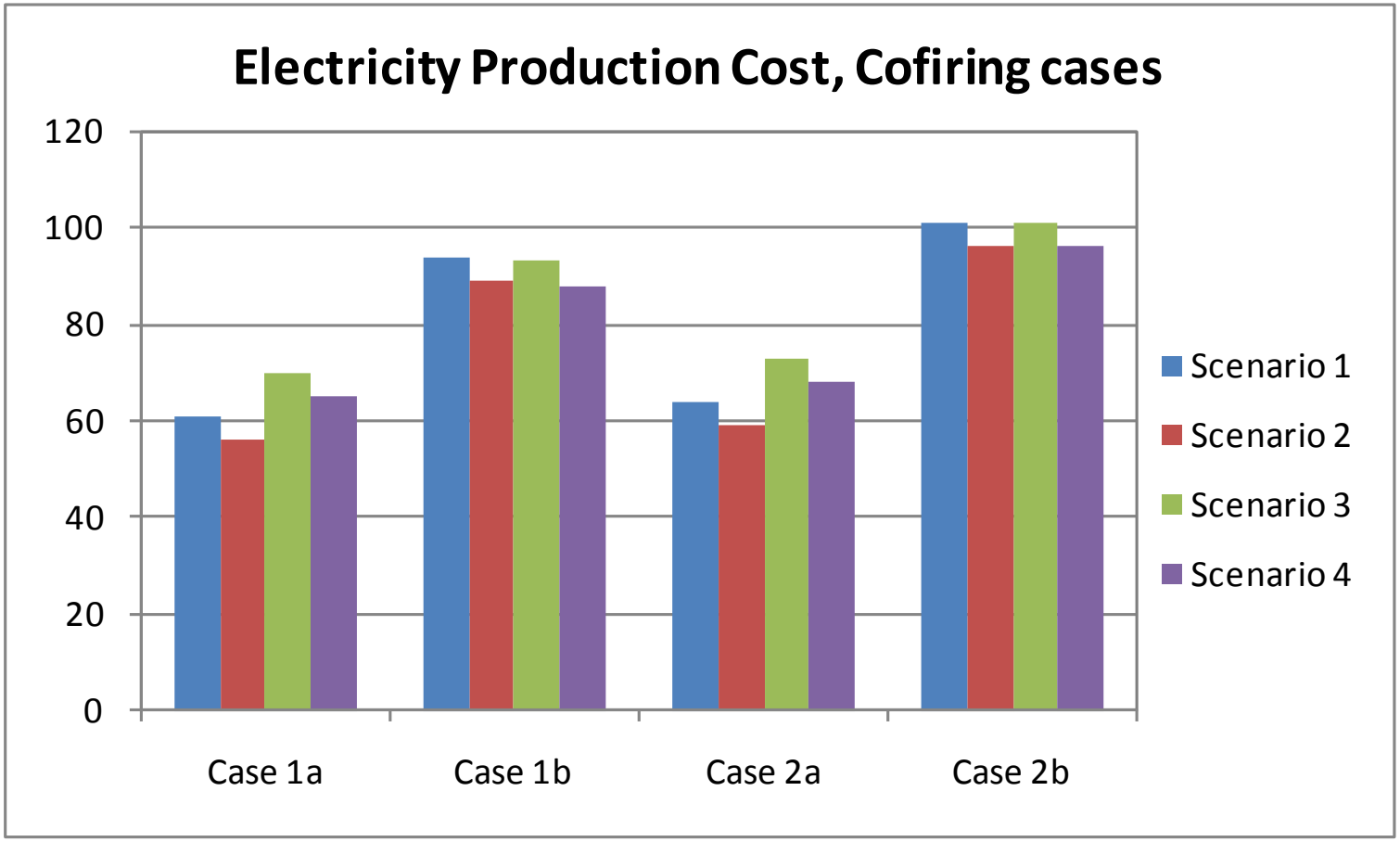

Cost of ETS to Incentivise Biomass CCS (Case 1a and Case 1b)

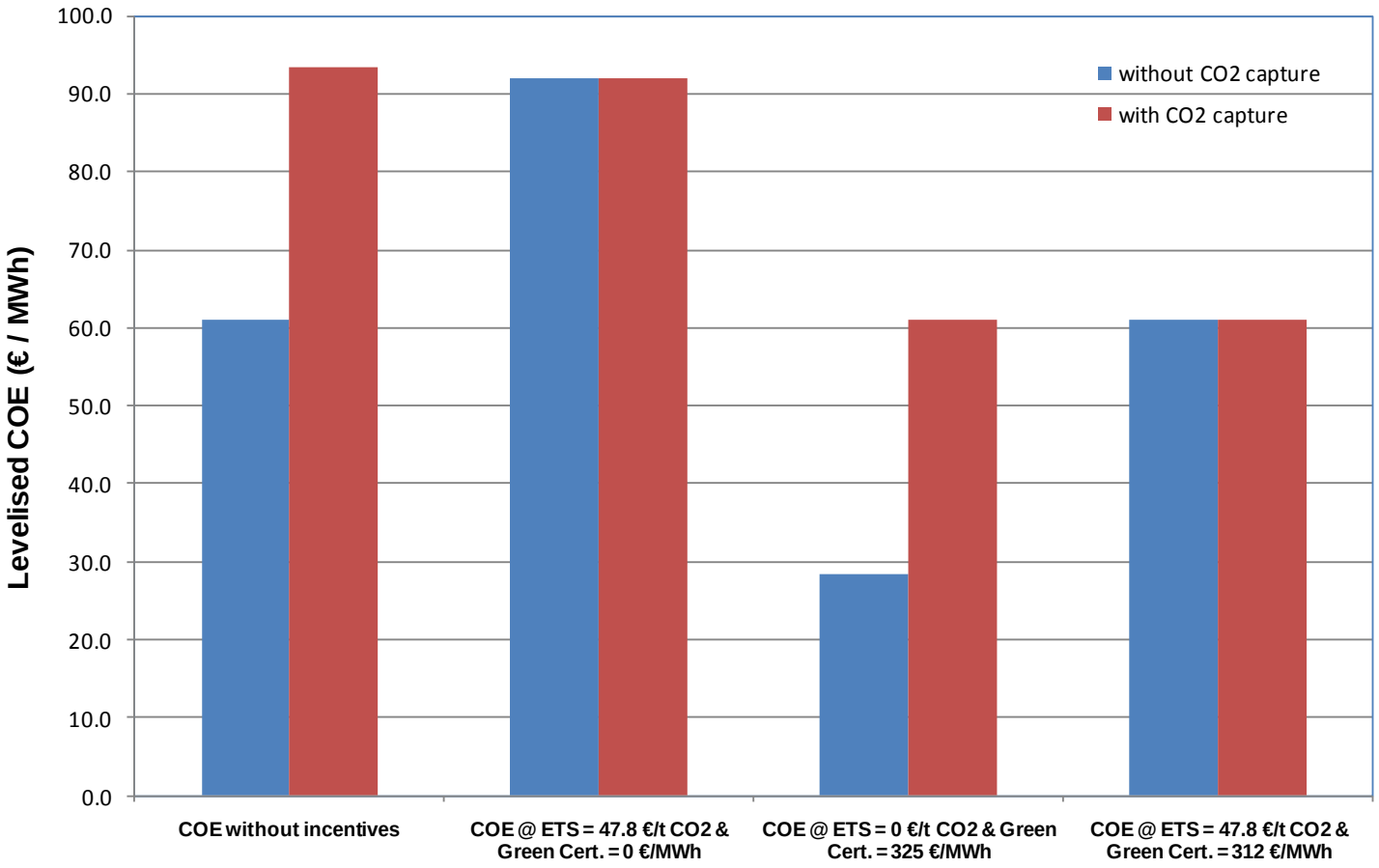

Concluding Remarks

- ***There is potential for the use of biomass fired power plant with CO2 capture to be economically viable.***
  - The economic viability of capturing CO_2 from biomass fired or co-fired power plant could be dependent on the price of carbon / carbon tax that would incentivise the CO_2 negative emissions.
- ***The study only evaluated the use of virgin wood as biomass feedstock – which is considered more expensive than indigenous low quality and more difficult burning biomass fuel. This should provide lower biomass fuel cost.***
- ***The capture of CO_2 from a biomass fired power plant using MEA Solvent, the following should be noted:***
  - it should be expected that the need to treat larger volume of flue gas and a deeper removal of the SO2 and NOx in the flue gas would contribute to the reduction of the performance of the plant and increase in cost (CAPEX and OPEX).
- ***This study only evaluated standard MEA solvent – therefore there are room for improvement in terms of cost and efficiency by using advance solvent.***

Thank you

Email: ***stanley.santos@ieaghg.org***

Website: ***http://www.ieaghg.org***

Back Up Slides for Biomass Fired Power Plant

Case 3a- Biomass Fired CFB Boiler Power Plant w/o CO_2 capture

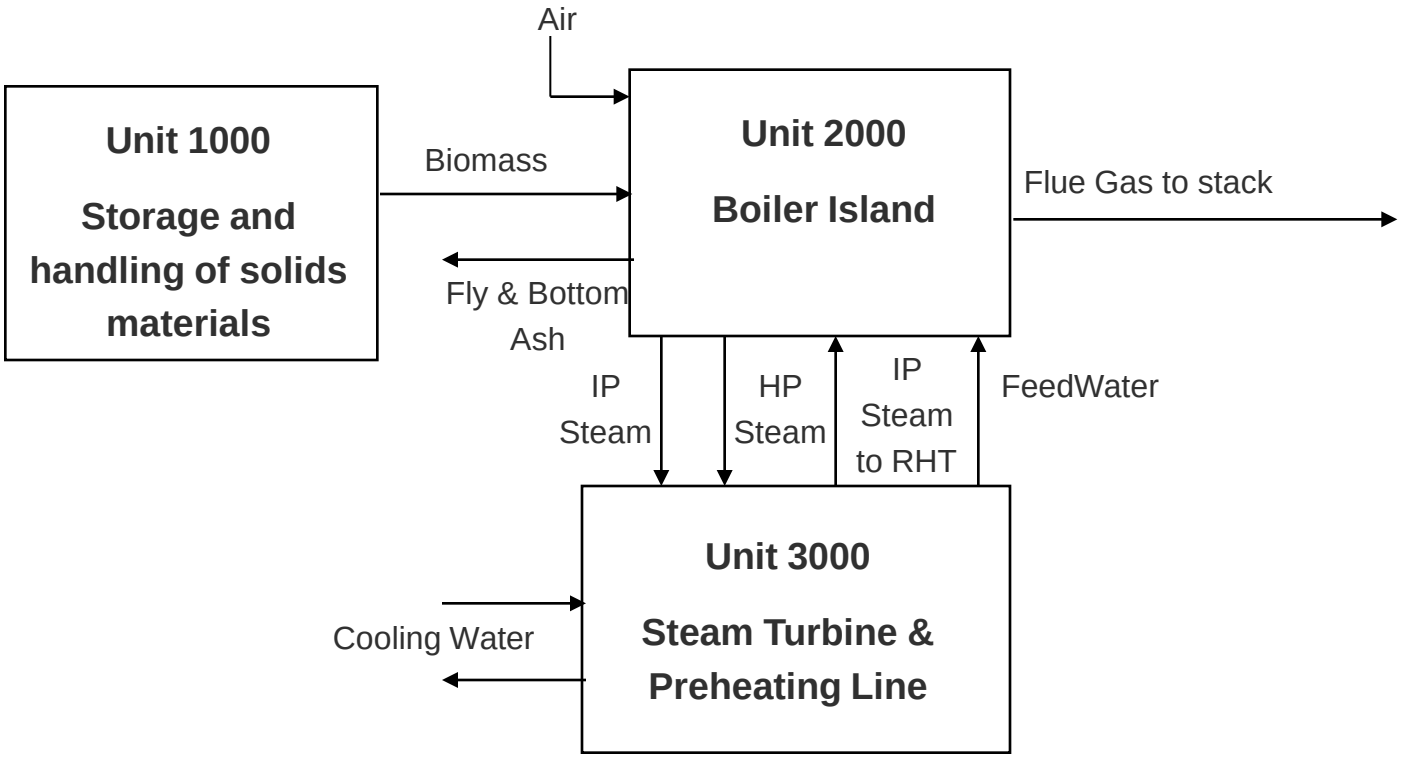

Case 3a – Power Plant Features

- ***Power Plant Capacity***
  - Actual Net Power Output: 273 MWe
- ***Boiler is a subcritical circulating fluidized bed unit which is commercially available / proven***
- ***Boiler is fired with 100% Biomass; no pre-drying of biomass is included.***
- ***Steam Conditions:***
  - 565°C HP (169 Bar) / 565°C RH (39 Bar)

Case 3a – Power Plant Features

- ***External FGD and limestone injection in the combustion chamber are not required to meet SOx emission limits because of the low sulphur content in biomass.***
- ***NOx is met by the CFB boiler. No SCR is necessary.***
- ***A Plastic Heat Exchanger is installed downstream of the ID Fan to maximise heat recovery.***

Case 3b - Biomass Fired CFB Boiler Power Plant with CO_2 capture

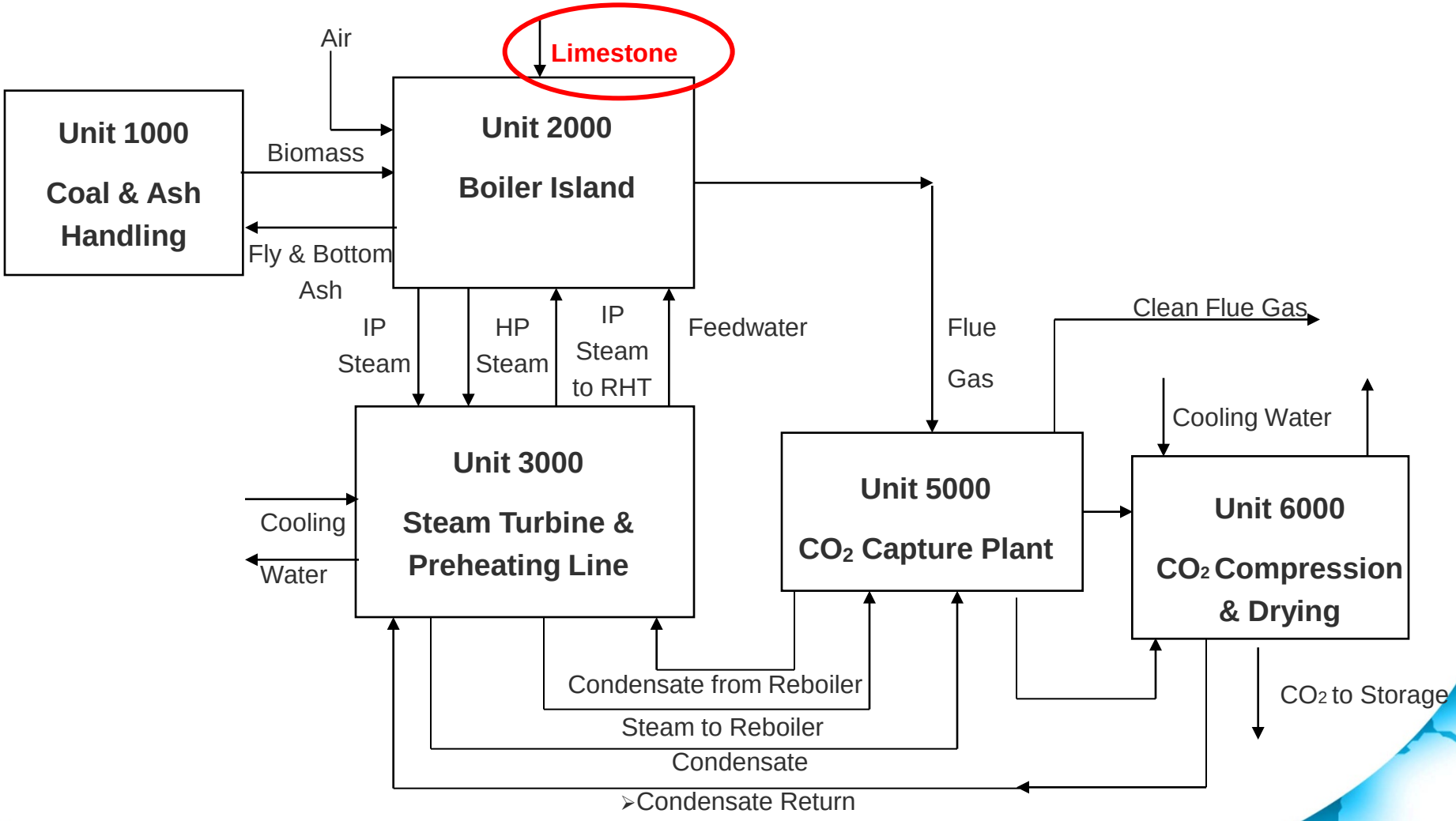

Case 3b – Power Plant Features

- ***Boiler is the same size with Case 3a. Due to extraction of low pressure steam from the steam turbine for the reboiler of the CO_2 capture plant – actual output is reduced.***
- ***Power Plant Capacity***
  - Actual Net Power Output: ~169 MWe
- ***No plastic heat exchanger installed downstream of the ID fan – due to the direct contact cooler of the CO_2 capture plant.***
- ***In order to achieve the 10 ppm SOx level as required to reduce degradation of the MEA, limestone is injected into the boiler with Ca/S ratio of ~2.8. (This system requires demonstration.)***

Case 3b – Power Plant Features

- ***NOx emissions limit is met by the CFB. Level of NO_2 in the flue gas is considered tolerable by the MEA, thus there will be no SCR installed.***
- ***N_2O at the boiler outlet is expected to be low due to the slightly higher temperature in the bed. N_2O is not expected to be removed by MEA. However the possibility of formation of stable salts from N_2O should be investigated with the MEA suppliers.***

Case 4a - Biomass Fired BFB Boiler Power Plant w/o CO_2 capture

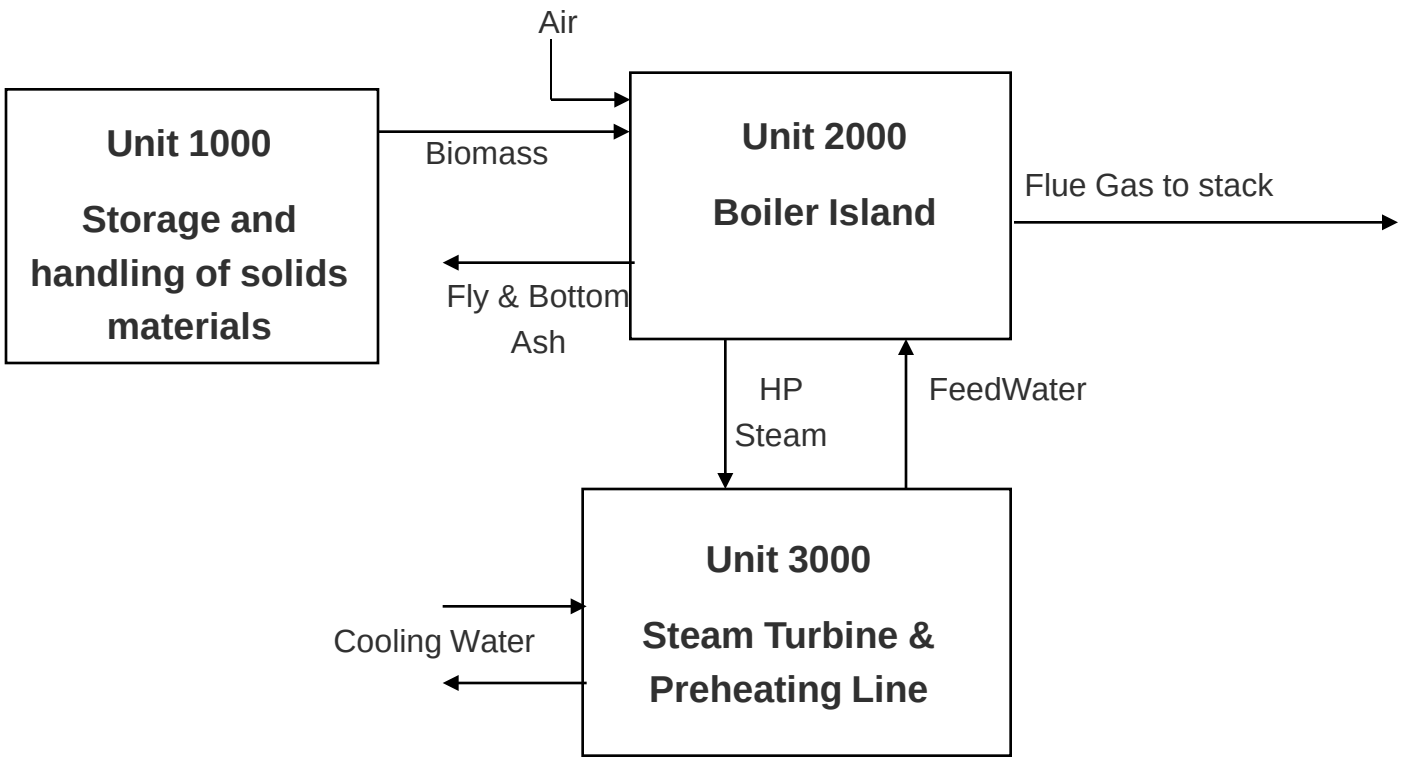

Case 4a – Power Plant Features

- ***Power Plant Capacity***
  - Actual Net Power Output: 75.8 MWe
- ***Boiler is a subcritical bubbling fluidized bed unit which is commercially available / proven***
- ***Boiler is fired with 100% Biomass; no pre-drying of biomass is included.***
- ***Steam Conditions:***
  - 540°C HP (115 Bar) / No Steam Reheat

Case 4a – Power Plant Features

- ***External FGD and limestone injection in the combustion chamber are not required to meet SOx emission limits because of the low sulphur content in biomass.***
- ***NOx is met by the BFB boiler. No SCR is necessary.***
- ***No Plastic Heat Exchanger is installed downstream of the ID Fan due to performance increase does not justify the investment cost.***

Case 4b - Biomass Fired BFB Boiler Power Plant with CO_2 capture

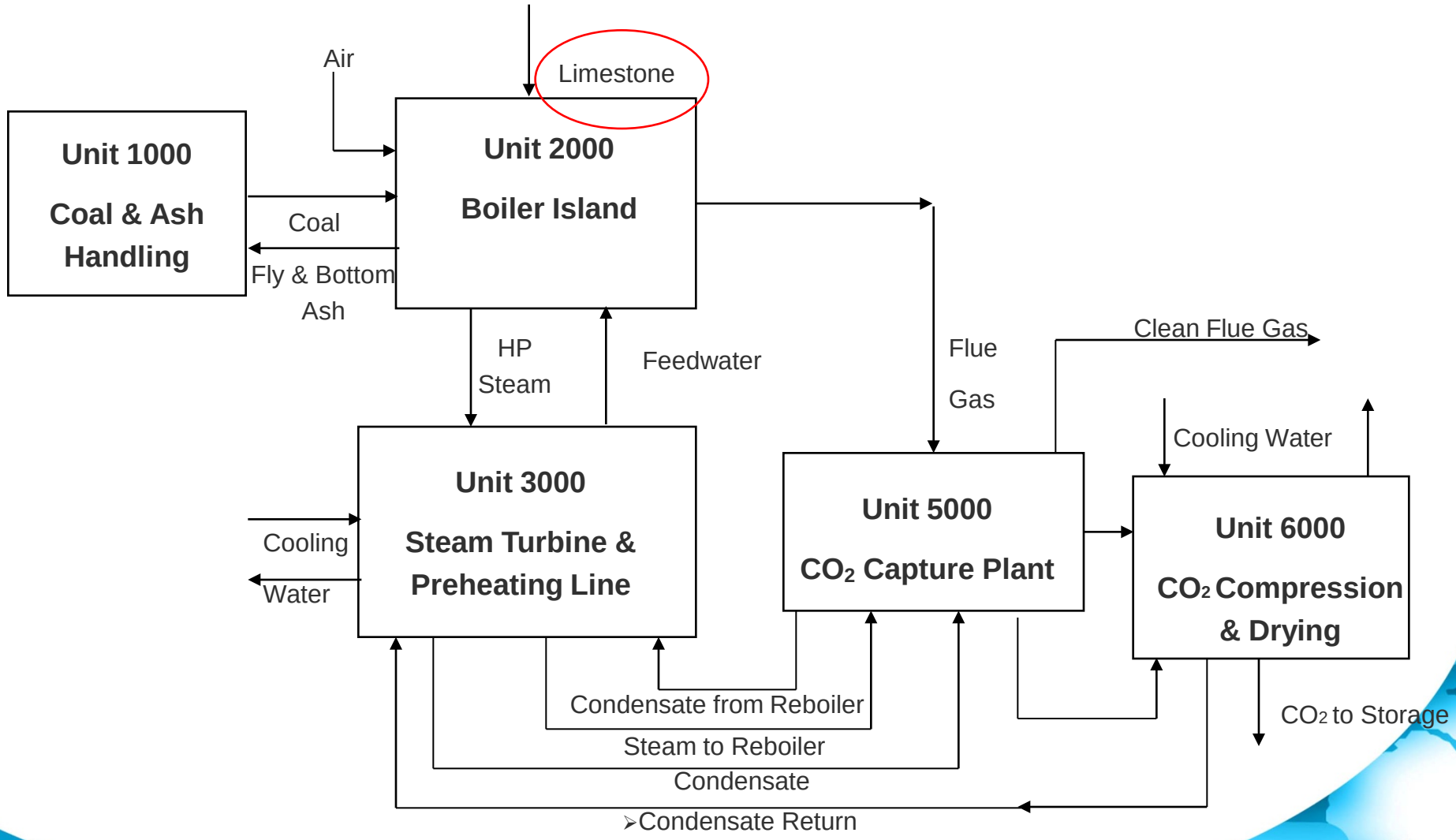

Case 4b – Power Plant Features

- ***Boiler is the same size with Case 4a. Due to extraction of low pressure steam from the steam turbine for the reboiler of the CO_2 capture plant – actual output is reduced.***
- ***Power Plant Capacity***
  - Actual Net Power Output: ~49 Mwe
- ***In order to achieve the 10 ppm SOx level as required to reduce degradation of the MEA, limestone is injected into the boiler with Ca/S ratio of ~2.8. No external FGD is required.***
- ***NOx emissions limit is met by the BFB. The NO2 level is considered tolerable to the MEA.***
- ***N_2O is considered low – but would require the evaluation of MEA solvent supplier with regard to formation of stable salt.***

Performance of the Power Plants - Summary

Case	Plant Type	Nominal Size	SCR	FGD	CO_2 Capture	Net Efficiency	Net output
1a	SC PF boiler	500 MWe	Yes	Yes	0	44.8%	518.9 MWe
1b	SC PF boiler	500 MWe	Yes	Yes	90%	34.5%	398.9 MWe
2a	SC CFB boiler	500 MWe	No	No	0	45.1%	521.4 MWe
2b	SC CFB boiler	500 MWe	No	Yes	90%	33.8%	390.5 MWe
3a	CFB boiler	250 MWe	No	No	0	41.7%	273.0 MWe
3b	CFB boiler	250 MWe	No	No	90%	25.8%	168.9 MWe
4a	BFB boiler	75 MWe	No	No	0	36.0%	75.8 MWe
4b	BFB boiler	75 MWe	No	No	90%	23.2%	48.9 MWe

Economic Analysis (cont'd)

Estimated CAPEX

	Total Investment cost Million of Euro	Specific Cost Euro/kW
Case # 1 a	657.21	1267
Case # 1 b	824.32	2066
Case # 2 a	707.28	1357
Case # 2 b	918.37	2352
Case # 3 a	370.30	1356
Case # 3 b	519.73	3077
Case # 4 a	185.42	2446
Case # 4 b	256.39	5243

Consideration of ETS or Green Certificate Incentives (Case 3 and 4)

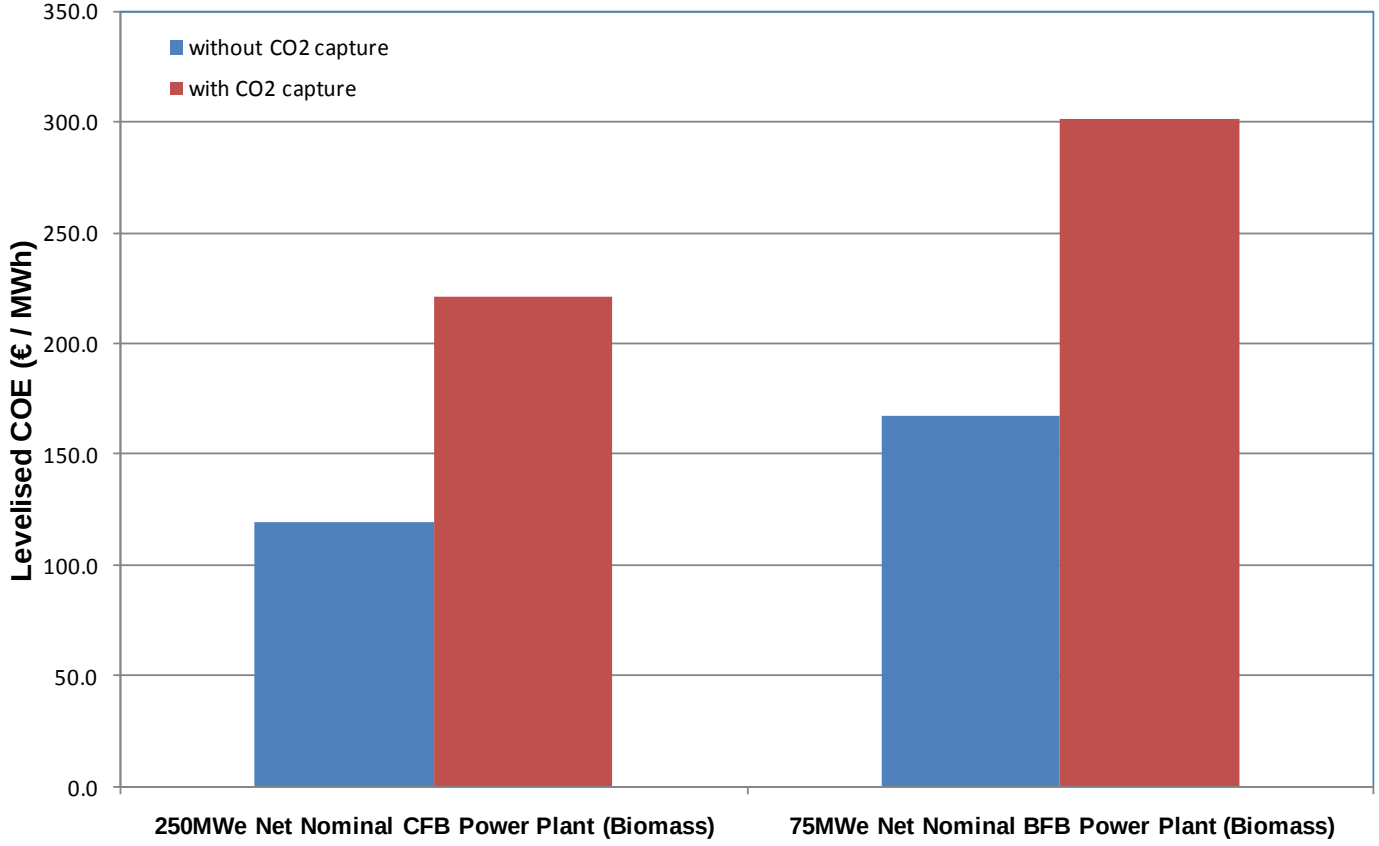

Economic summary

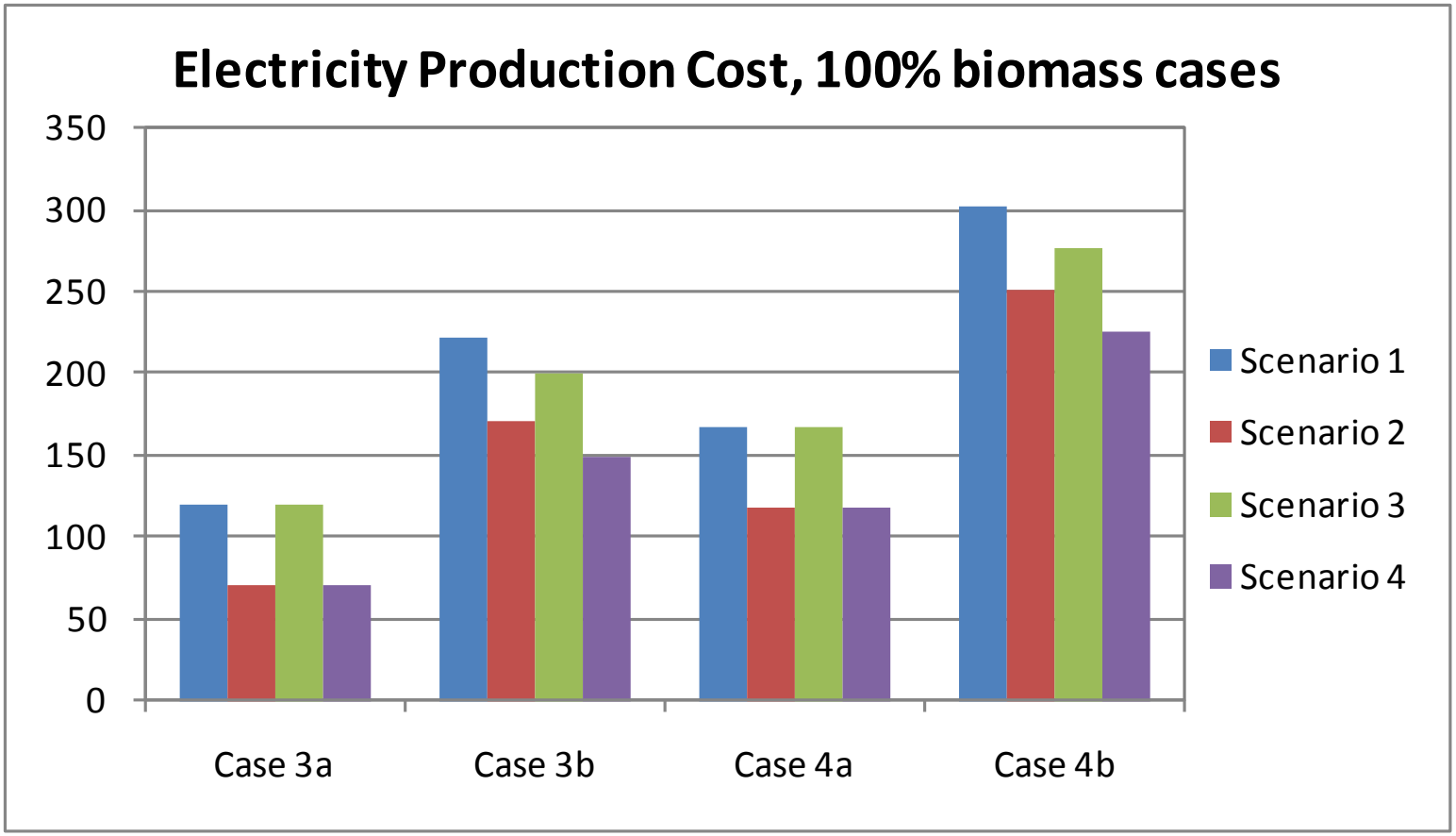

Cost of ETS to Incentivise Biomass CCS (Case 3a and Case 3b)