2nd Oxyfuel Combustion Conference

CIUDEN PC Boiler Technological Development in Power Generation

Ruth Diego*, César López, Benito Navarrete, Tomás Coca, Luis Angel López

Fundación Ciudad de la Energía (CIUDEN), II Avenida de Compostilla, s/n,24400 Ponferrada (León), Spain

Keywords: Oxycombustion; CCS test facility; CO_2 capture

1. Introduction

Fundacion Ciudad de la Energia (CIUDEN) is one of the most relevant European initiatives for the deployment of CCS technologies. Particularly, CIUDEN has designed a complete test programme focused on the development of oxycombustion technologies, both Pulverised Coal (PC) and Circulating Fluidised Bed (CFB).

This paper includes the description of the CIUDEN´s 20 MW_{th} PC boiler and oxidant preparation system, integrated in the Technology Center for CO_2 Capture and Transport (TCCT), as well as the test programme and preliminary results.

The PC boiler has been designed according to an indirect firing scheme. Different types of burners can be installed to treat this variety of fuels (arch, frontal and tangential burners). The system includes a fuel preparation unit – grinding, milling and drying - which allows processing and mixing a wide range of fuels (anthracite, bituminous, subbituminous, petcoke, biomass).

Taking into account the peculiarities of experimental facilities, the PC Boiler has been equipped with sufficient instrumentation and monitoring & control systems as well as a geometry which allows obtaining relevant data so as to extrapolate the results to a full-scale design [1].

2. CIUDEN PC Boiler

CIUDEN PC boiler is a 20MWth unit with research purpose focused on oxy combustion and CO2 capture. It has been designed to applied clean coal technologies for different types of fuels (anthracite, bituminous, sub-bituminous, pet coke/anthracite mixture). The boiler allows the operation under both conventional mode (air as oxidant) and under oxy combustion mode. Moreover, the boiler is designed to operate up to 25% of its thermal power provided by biomass [2].

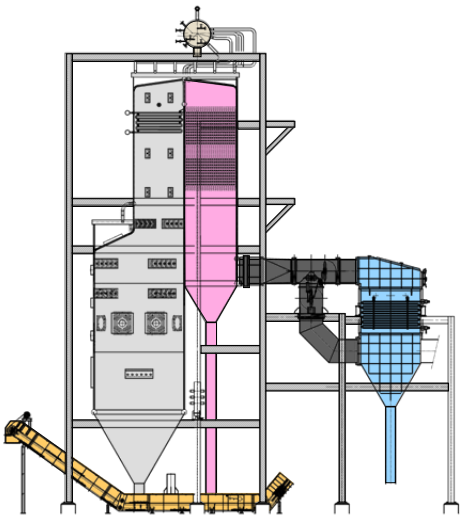

Figure 1. Simplified view of PC Boiler

Figure 2. Views of the Ciuden´s PC Boiler

The boiler is a vertical membrane water-tube type with square (4.5x4.5 m) cross section furnace, with natural circulation and balanced draft by forced and induced draft fans.

The main design parameters of the experimental PC Boiler are the following:

Design fuel:	El Bierzo Anthracite
Steam flow:	20 – 30 t/h
Steam temperature:	420 ºC
Steam pressure:	30 bar
Feed water temperature:	170 ºC
Combustion air/oxidant temperature:	80 ºC - 350 ºC

The design has been based on the proximate analysis of El Bierzo Anthracite coal:

Proximate analysis as received (wet)	Anthracite
Moisture (%)	8.8
Volatiles (%)	6.5
Ash (%)	32.0
Fixed carbon (%)	52.7
H.H.V. (kcal/kg)	4888

Using an economiser bypass and controlling feed water temperature, the boiler flue gas temperature can be adjusted in the range from 350°C to 425°C, so as to have the required thermal level for subsequent high temperature gas treatment processes. In the feed water pre-heater located in the gas outlet duct of the SCR unit gases are cooled down to 200°C.

Following the flue gas path, the boiler has two different passes, the radiant and the convective upwards of the furnace. The radiant superheater and the first part of the membrane economizer are located in the radiant pass. The second part of the membrane economizer as well as the convective superheaters I and II are located in the convective pass. Temperature of the steam is controlled by spray injection between superheater banks.

The in-furnace gas temperature is controlled depending on the type of coal/oxidant and the type of burner. This is achieved by using removable refractory bricks in the lower combustion zone of the furnace.

The front water wall tubes form the “nose” of the lower furnace. Both the front and the rear water wall tubes in their upper part are sloped inside to form the furnace roof. The lateral water walls form the furnace hopper. An opening is provided for slag discharge. The refractory surface in the bottom of the furnace can be modified depending on the volatile contents of the used fuel;, removable bricks are used for this purpose. The furnace geometry provides enough residence time for each type of fuel and the three types of burners.

UV flame detectors, IR flame detectors and extractive gas probes are available for flame control and combustion arrangement analysis. Specific instrumentation is installed to record other important combustion parameters such as HVT probes to measure in-furnace gas temperature, or heat flux probes.

Burner System

Each burner is dimensioned to lead the adjusted flows of oxidant in three main streams: Primary, Secondary and Overfire oxidant.

Coal is conveyed by primary oxidant flow through the PC ducts to the burners.

Temperature of the secondary and over-fire air/oxidant can be regulated in the range from 200ºC to 350oC. Temperature of primary mixture depends on the fuel volatile content and can be regulated in the range from 80ºC 150 oC.

The unit has been designed to accommodate multiple burners which provide a wide range of operating conditions. It is possible to arrange tests using wall firing burners (four burners, on the opposite walls, swirl type), arch firing burners (two burners) and tangentially firing burners (four burners, on the corners, jet type). Moreover, the PC Boiler includes a large number of over/under fire openings in order to test the optimal combustion configuration.

Openings for over fire air (oxidant) are foreseen at two levels above the horizontal burners. Burners are equipped with natural gas ignitors for the boiler starting-up.

3. .- Oxidant Preparation System

Oxidant streams required for oxycombustion are prepared by mixing oxygen and recycled flue gas in order to control the combustion temperature. A variety of formulations for the oxidant streams are considered in test plans according to several reasons:

- Study of the behaviour of different O_2 concentrations and mixtures
- Determination of material corrosion for variable high oxygen contents
- Control of oxygen concentration in fuel transport streams in order to avoid the possibility of early combustion
- Control of moisture content in the solids transport stream so as to avoid condensation in cold surfaces of the system.

In the PC combustion chamber the following inlets are included:

- Primary Oxidizer (CB1): to introduce pulverised coal into the furnace through the burners, supplying at the same time a part of the oxidation agent necessary for combustion.
- Secondary Oxidizer (CB2): to provide total and safe combustion of the fuel in the furnace (main source of oxygen).
- Tertiary Oxidizer (CB3): to stage combustion and minimize NOx formation.

In order to reach partial or total oxycombustion conditions in the boiler, flue gases are recirculated and mixed with oxygen. There are two recirculation streams: FGR1 taken downstream from the desulphurisation unit, and FGR2 taken upstream from the desulphurisation unit.

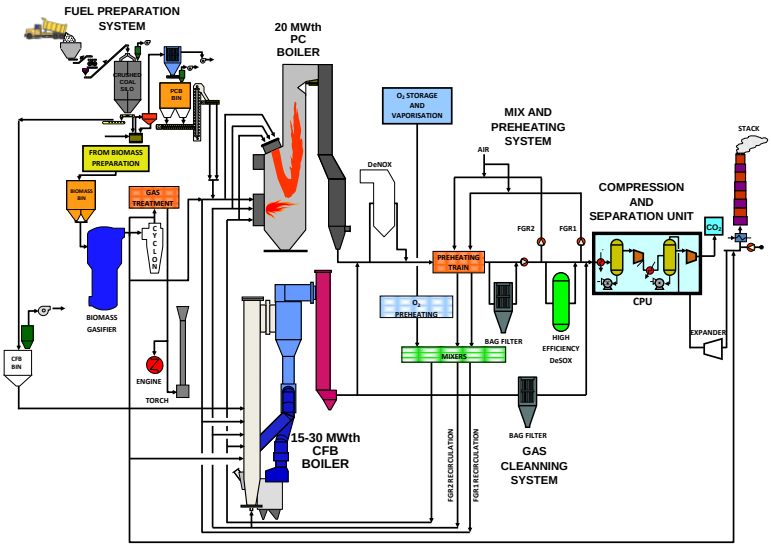

Figure 3. TDP simplified flow diagram

4. .- Test Programme

The CIUDEN´s R&D Programme is focused on the validation of the full chain of CCS technologies and the data acquisition for scaling-up PC boilers under oxycombustion operation mode. To achieve these objectives, CIUDEN has designed a complete Test Programme considering the wide range of capabilities of the installation.

Some of the PC Unit research aims included in the Test Programme are the following:

- To obtain data on the combustion behaviour of the specified coals in oxy-combustion conditions.
- To evaluate the impact that oxycombustion might have on combustion, emissions and radiant and convective boiler surfaces.
- Thermal-economic analysis of the impact of oxy/coal/RFG firing on the new power plants design as well as on retrofit existing boilers.
- Heat transfer under oxy - mode: Measurements of the spectral radiation characteristics for oxy/coal/RFG flames and associated distribution between radiation and convective heat transfer.
- Combustion, ignition and flame stability.
- Research on the gas-side corrosion resistance.
- Mineral matter: ash, slagging and fouling.
- Formation and reduction of pollutants: particulate matter, NO_X, SO_X and others.
- Tools development for scale up: analysis of the impact of oxy/coal/RFG firing on the design of a new build plant as well as a representative boiler suitable for retrofit.

Relevant results are expected for the first six months test campaign, during the first semester of 2011.

References

[1] M Lupion; B Navarrete; P Otero; V J Cortes. CIUDEN CCS Technological Development Plant on oxycombustion in Coal Power Generation. 1st International Oxyfuel Combustion Conference. Cottbus, Germany. September 2009

[2] M Lupion, R Diego, L Loubeau, B Navarrete. CIUDEN CCS Project: Status of the CO_2 Capture Technology Development Plant in Power Generation. GHGT-10. Amsterdam. September 2010.